HYDROMAX

HGP-2AY

- Displacement : 1~13 cc/rev
- Max. Pressure : 250 kgf/cm^2 (3500psi)
- Flange : JIS 4-bolt

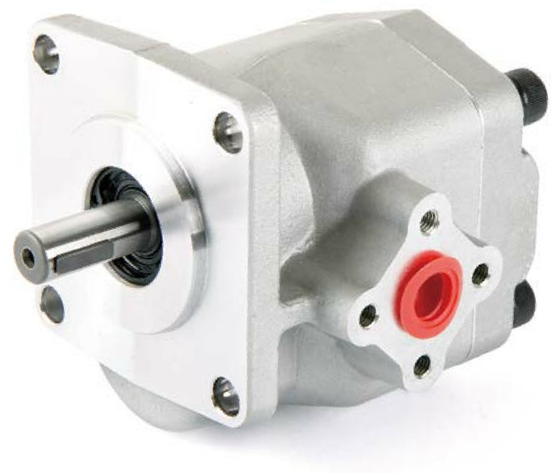

SCHEMATIC SYMBOL

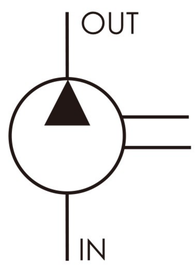

ORDER CODES

HGP-2AY - F 12 R - W1 - 4BJ - P2

1 2 3 4 5 6 7

1	Model Name	HGP-2AY	standard
		HGP-2A	old standard
2	Mounting	F	flange type
		L	foot type
3	Delivery Capacity	1, 2, 25, 3, 4, 5, 6, 8, 9, 11, 12, 13	
4	Rotation Direction	R	clockwise
		L	counter - clockwise
5	Shaft Type *	W: tang shaft Y: spline shaft	X: straight shaft Z: taper shaft
6	Flange Mounting Type	4BJ	JIS 4-bolt
7	Inlet and Outlet *	F: flange type(F1) P: PT(P1~P2)	G: PF, G, BSPP(G1~G2) N: NPT(N1~N2)

* The dimension of shafts and inlet & outlet sizes please refer to Page 15.

SPECIFICATIONS

Model	Accurate Displacement Capacity (cc/rev)	Operational Pressure (kgf/cm^2)	Max. Pressure (kgf/cm^2)	Speed (r.p.m.)			Weight (kg)	
				Rate	Max.	Min.	HGP-2AY	HGP-2A
HGP-2AY-1	1	210	250	1800	5000	1000	1.60	1.65
HGP-2AY-2	2	210	250	1800	5000	1000	1.64	1.69
~~HGP-2AY-25~~	~~2.5~~	~~210~~	~~250~~	~~1800~~	~~5000~~	~~850~~	~~1.65~~	~~1.70~~
HGP-2AY-3	3	210	250	1800	5000	850	1.65	1.70
HGP-2AY-4	4	210	250	1800	4500	800	1.66	1.71
HGP-2AY-5	5	210	250	1800	3500	700	1.66	1.71
HGP-2AY-6	6	210	250	1800	3500	700	1.67	1.72
HGP-2AY-8	7.5	210	250	1800	3000	600	1.69	1.74
HGP-2AY-9	9	210	250	1800	2500	550	1.69	1.74
HGP-2AY-11	10.5	210	250	1800	2000	500	1.69	1.74
HGP-2AY-12	12	175	210	1800	2000	500	1.71	1.76
HGP-2AY-13	13	175	210	1800	2000	500	1.67	1.72

* HGP-2AY-1, HGP-2AY-25, HGP-2AY-5 and HGP-2AY-13 do not belong to regular products. Customized service can be provided.

DIMENSIONS (unit : mm)

HGP-2AY

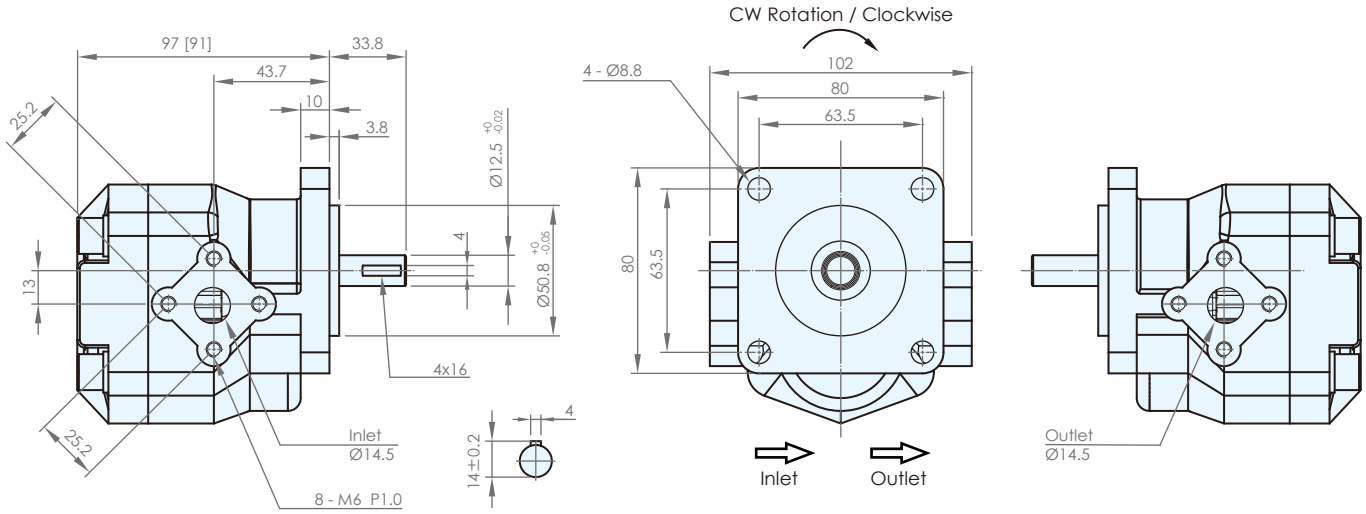

HGP-2A-F-X-4BJ

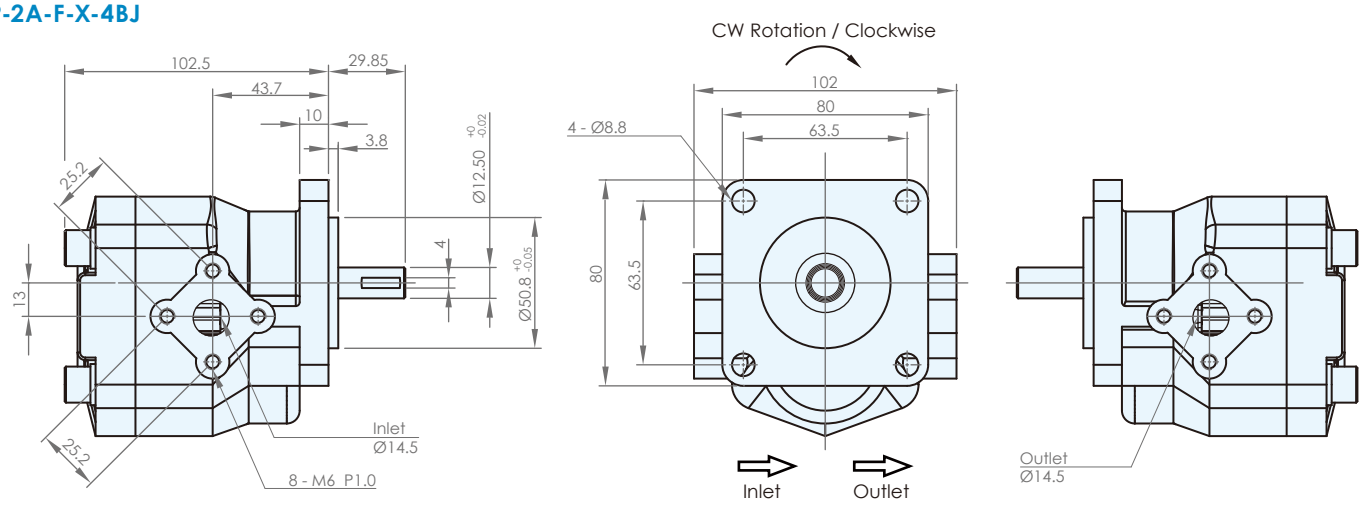

HGP-2A-F-Z-4BJ

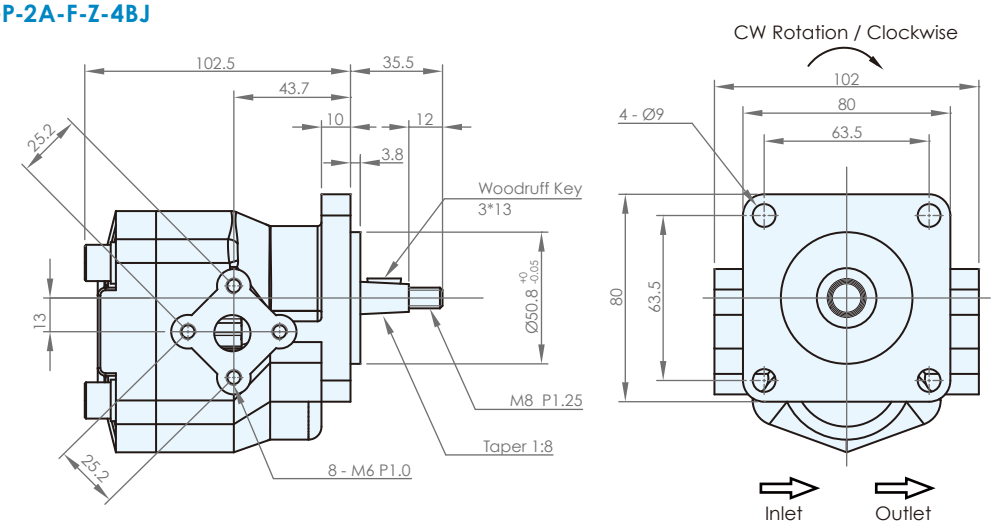

HYDROMAX

DIMENSIONS (unit : mm)

HGP-2A-F-W-4BJ

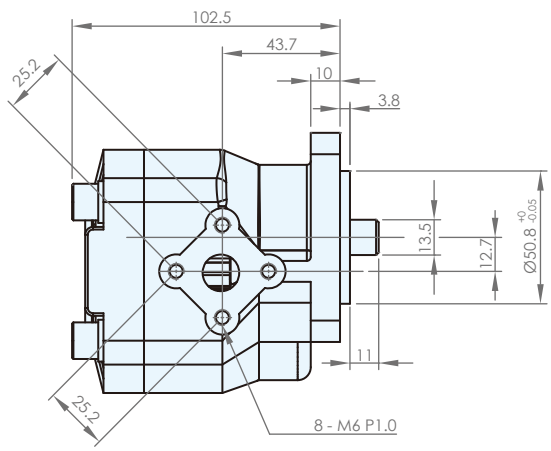

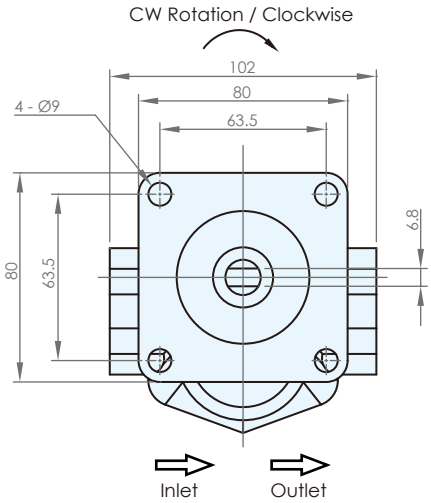

DECOMPOSITION CHARTS

HGP-2AY

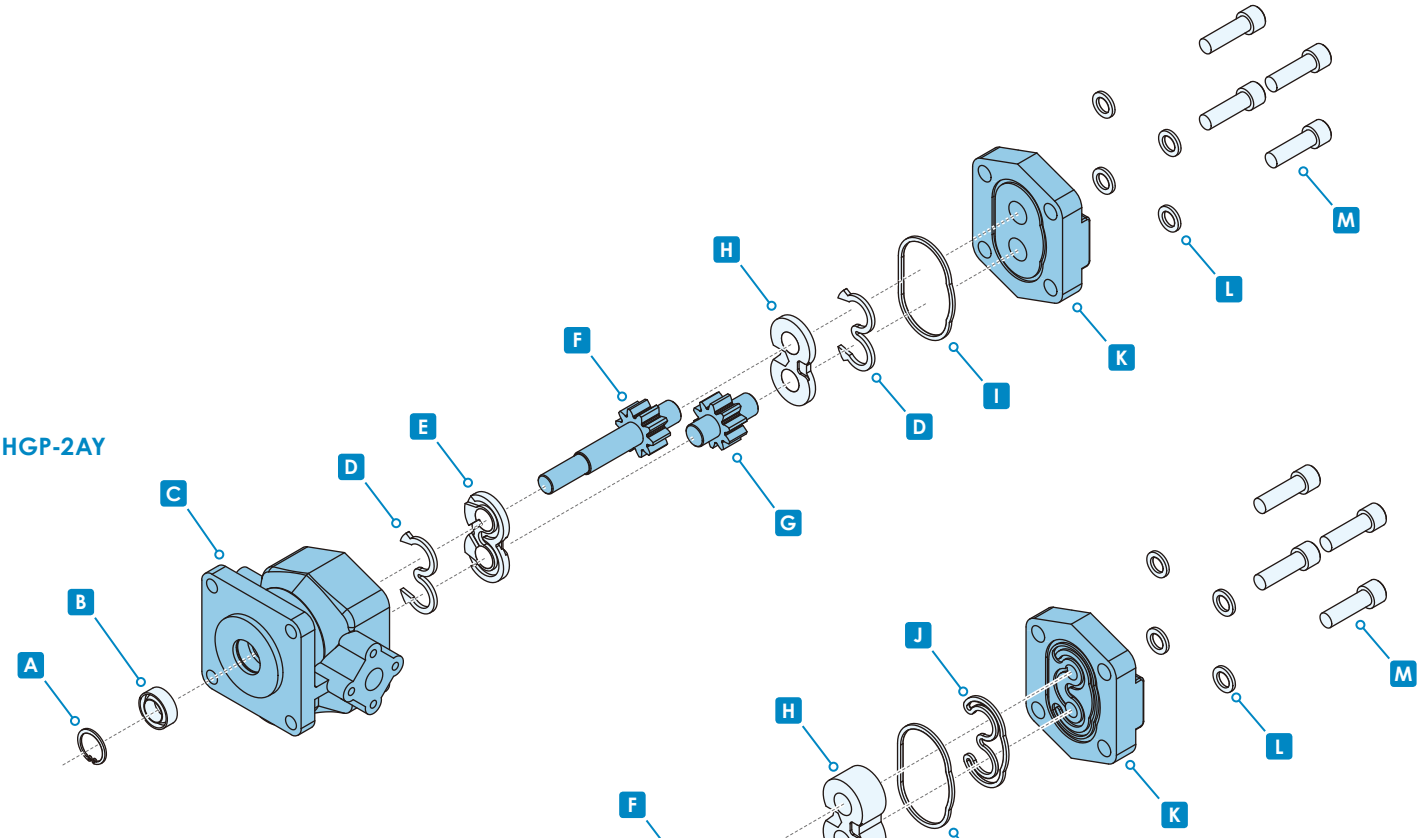

HGP-2A

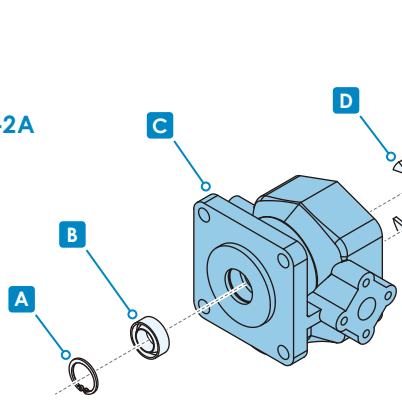

Item No.	Part Descriptions	Q'ty
A	C-ring	1
B	Shaft seal	1
C	Housing	1
D	Bush lobe seal	1

Item No.	Part Descriptions	Q'ty
E	Matching bearing	1
F	Drive gear	1
G	Driven gear	1
H	Matching bearing	1
I	O-ring	1
J	Back-up ring	1
K	Rear cover	1
L	Bolt washer	4
M	Bolt	4

ADDITIONAL DIMENSION

Dimension of Shaft

X1

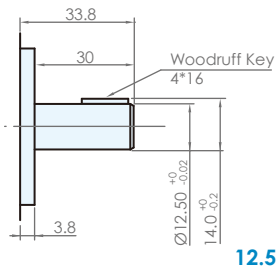

12.5

Y1

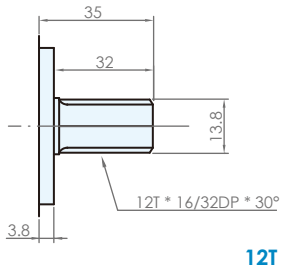

12T

Z1

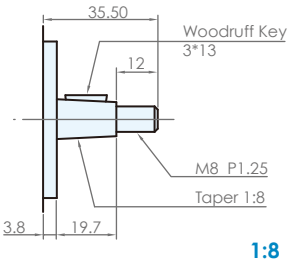

1:8

W1

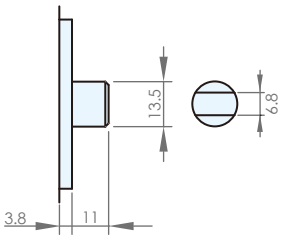

tang shaft

Inlet and Outlet Size

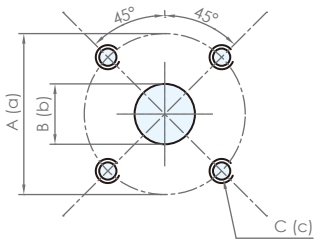

Flange Type

Code	Inlet			Outlet		
	A	B	C	a	b	c
F1	35	14.5	M6	35	14.5	M6

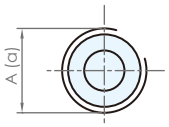

PF (G, BSPP)

Code	Inlet	Outlet
	A	a
G1	G 3/8"	G 3/8"
G2	G 1/2"	G 1/2"

PT (BSPT)

Code	Inlet	Outlet
	A	a
P1	3/8" PT	3/8" PT
P2	1/2" PT	1/2" PT

NPT

Code	Inlet	Outlet
	A	a
N1	3/8" NPT	3/8" NPT
N2	1/2" NPT	1/2" NPT