HYDROMAX

HGP-11A

- Displacement : 0.5~8 cc/rev (single)
- Max. Pressure : 250 kgf/cm^2 (3500psi)
- Flange : SAE 2-bolt, DIN 4-bolt, European 4-bolt

SCHEMATIC SYMBOL

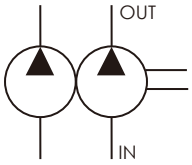

ORDER CODES

HGP-11A - F 2 08 R - X2 - 4BDB - P1

1 2 3 3 4 5 6 7

1	Model Name	HGP-11A	
2	Mounting	F	flange type
		L	foot type
3	Delivery Capacity	05, 08, 1, 2, 26, 3, 4, 5, 6, 8	
4	Rotation Direction	R	clockwise
		L	counter - clockwise
5	Shaft Type *	X: straight shaft	Y: spline shaft Z: taper shaft
6	Flange Mounting Type	2B	SAE 2-bolt
		4BDA	DIN 4-bolt (type A)
		4BDB	DIN 4-bolt (type B)
		4BE	European 4-bolt
7	Inlet and Outlet *	F: flange type(F1~F2) G: PF, G, BSPP(G1~G2) P: PT(P1~P2) N: NPT(N1~N2) U: UNF(U1~U2)	

* The dimension of shafts and inlet & outlet sizes please refer to Page 11.

SPECIFICATIONS

Model	Accurate Displacement Capacity (cc/rev)	Operational Pressure (kgf/cm^2)	Max. Pressure (kgf/cm^2)	Speed (r.p.m.)			Weight (kg)
				Rate	Max.	Min.	
HGP-11A-0505	0.5+0.5	210	250	1800	4500	1000	2.61
HGP-11A-0808	0.8+0.8	210	250	1800	4500	1000	2.71
HGP-11A-11	1+1	210	250	1800	4500	1000	2.81
HGP-11A-22	2+2	210	250	1800	4500	600	2.91
HGP-11A-2626	2.6+2.6	210	250	1800	4500	600	3.11
HGP-11A-33	3+3	210	250	1800	4500	600	3.13
HGP-11A-44	4+4	210	250	1800	4000	600	3.17
HGP-11A-55	5+5	210	250	1800	3200	600	3.21
HGP-11A-66	6+6	210	250	1800	3200	600	3.41
HGP-11A-88	8+8	170	210	1800	3200	600	3.61

* We provide many options to meet your displacement inquiries of tandem gear pumps, such as HGP-11A-208 (2+0.8 cc/rev).
* HGP-11A-05 and HGP-11A-26 do not belong to regular products. Customized service can be provided.

DIMENSIONS (unit : mm)

HGP-11A-2B

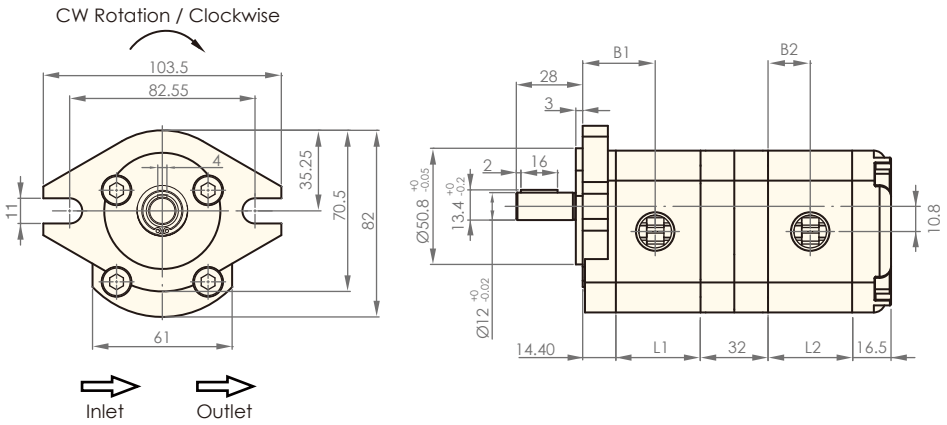

HGP-11A-4BD, 4BE

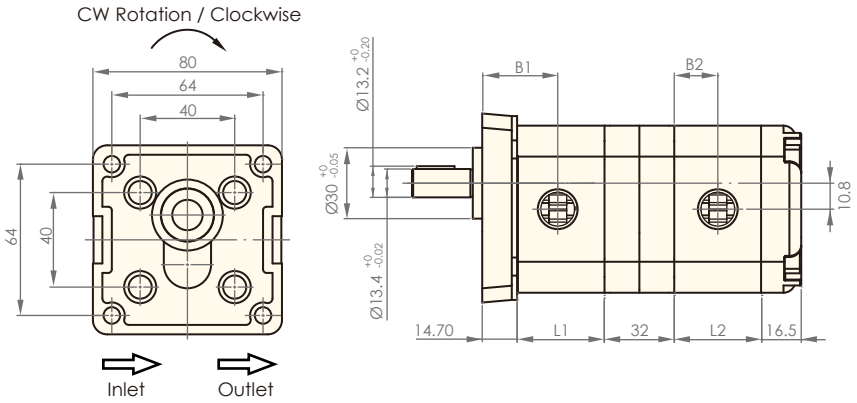

Model	L1, L2	B1	B2
HGP-11A-05-2B	34	31.4	17
HGP-11A-08-2B	35	31.9	17.5
HGP-11A-1-2B	37	32.9	18.5
HGP-11A-2-2B	40	34.4	20
HGP-11A-26-2B	42	35.4	21
HGP-11A-3-2B	45	36.9	22.5
HGP-11A-4-2B	47	37.9	23.5
HGP-11A-5-2B	51	39.9	25.5
HGP-11A-6-2B	55	41.9	27.5
HGP-11A-8-2B	61	44.9	30.5

Model	L1, L2	B1	B2
HGP-11A-05-4BD, 4BE	34	31.7	17
HGP-11A-08-4BD, 4BE	35	32.2	17.5
HGP-11A-1-4BD, 4BE	37	33.2	18.5
HGP-11A-2-4BD, 4BE	40	34.7	20
HGP-11A-26-4BD, 4BE	42	35.7	21
HGP-11A-3-4BD, 4BE	45	37.2	22.5
HGP-11A-4-4BD, 4BE	47	38.2	23.5
HGP-11A-5-4BD, 4BE	51	40.2	25.5
HGP-11A-6-4BD, 4BE	55	42.2	27.5
HGP-11A-8-4BD, 4BE	61	45.2	30.5